Dec 2004 | PHOTON COUNTER

3-0235 — 50 SHEETS — 5 SQUARES
3-0236 — 100 SHEETS — 5 SQUARES
3-0237 — 200 SHEETS — 5 SQUARES
3-0137 — 200 SHEETS — FILLER
COMET

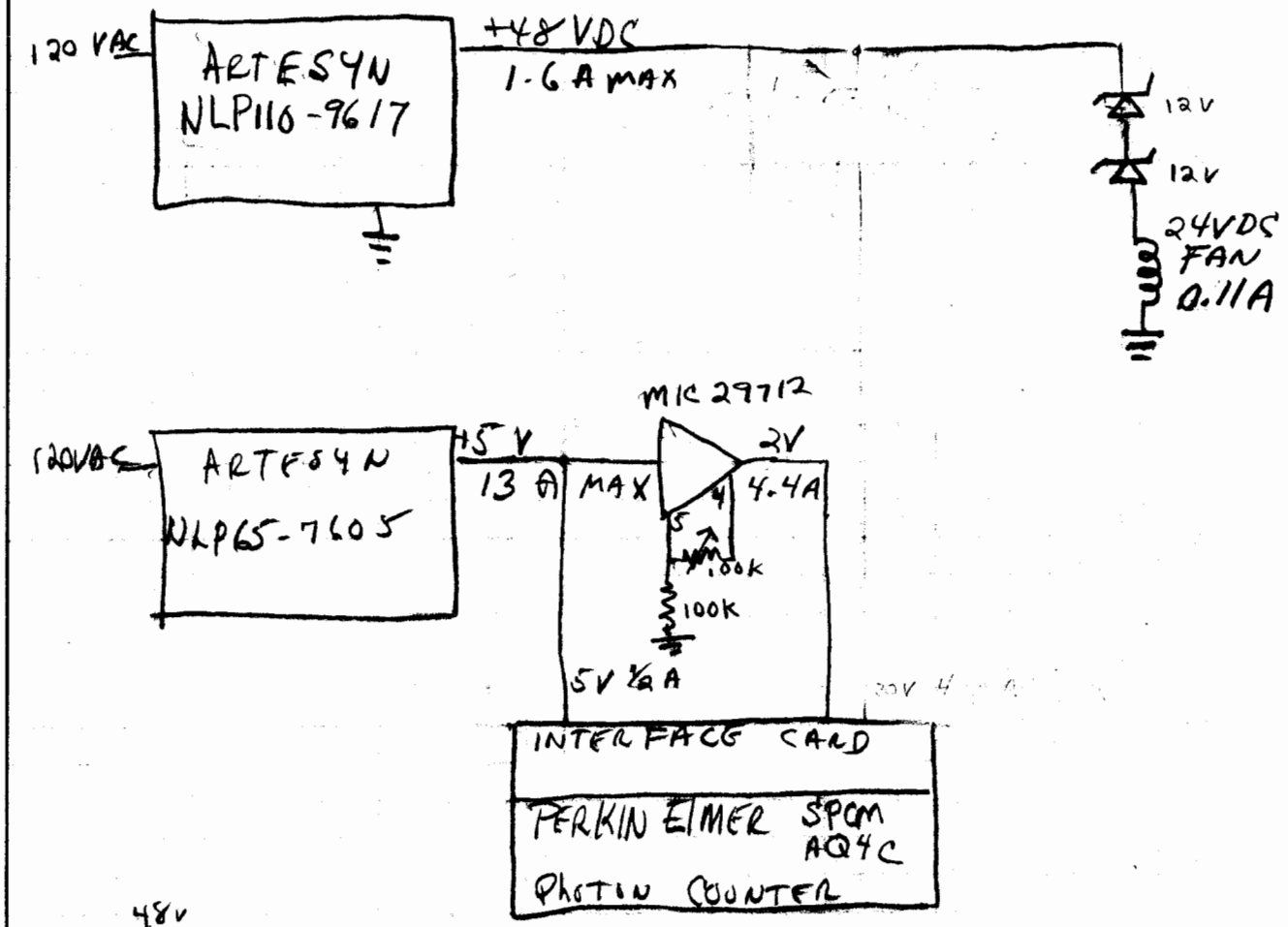

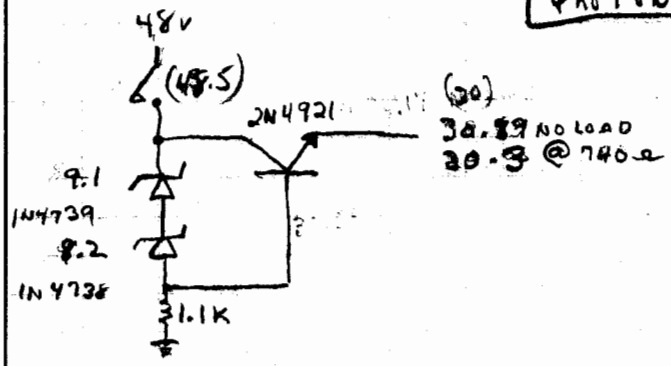

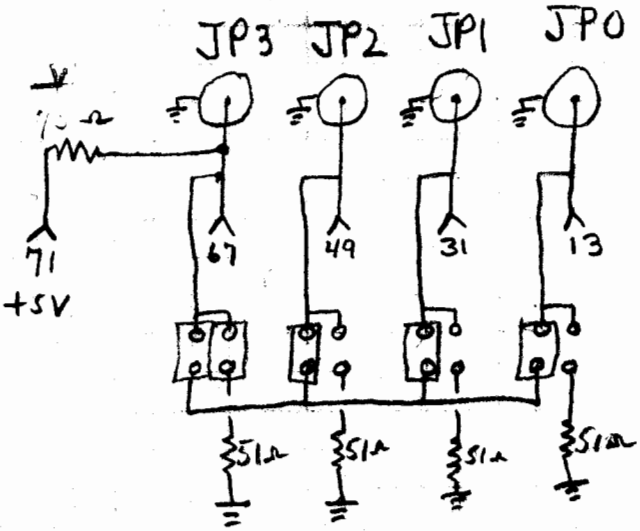

* Pullup to disable GATES when No INPUT Applied

GATES' DRIVER SINK $= \frac{5V}{75\Omega} = 67mA$