LENDING Slips
University of Alaska Fairbanks Interlibrary Loan

ILLiad TN: 121686

LENDING REQUEST

TN:121686
Borrower: ORC
Lending String: *UAF,XFF,RLA,HTM,ORU

Patron: Renn, Susan

Journal Title: Oikos.

Volume: 49 **Issue:**
Month/Year: 1987 **Pages:** 111-118

Article Author:

Article Title: Pierce GJ 'Eight Reasons why optimal foraging theory is a complete waste of time'

Imprint: Copenhagen ; Munksgaard, 1949 9999

ILL Number: 24455850

Call #: PERIODICAL

Location: BIOSCI

Request Date: 10/23/2006 06:51:15 PM
ARIEL
Charge
Maxcost: 25.00IFM

Shipping Address:
Reed College
Library - ILL
3203 SE Woodstock Blvd
Portland, OR 97202

Fax: 503-777-7786
Ariel: 134.10.176.14
Odyssey:
Email: cynthia.hoff@reed.edu

Check when Updated to Found:

FORUM
FORUM
FORUM

FORUM is intended to facilitate communication between reader and author and reader and reader. Comments, viewpoints or suggestions caused by speculative controversial papers are welcome. Discussion about important issues in ecology, e.g. theory or terminology may also be included. Contributions should be as concise as possible. A summary introducing the topic and summarizing the argument may be included. Reference should be made only to work basic to the topic. A lighter prose, designed to attract readers, will be permitted. Formal research reports, albeit short, will not be accepted.

Ed.

Eight reasons why optimal foraging theory is a complete waste of time

G. J. Pierce and J. G. Ollason, Culterty Field Station, Univ. of Aberdeen, Newburgh, Ellon, Aberdeenshire AB4 OAA, Scotland (no significance is to be attached to the order of the authors' names)

Summary. We present a series of criticisms of the application of optimization theory to the behaviour and morphology of animals, using the example of optimal foraging theory. The criticisms are independent and presented in decreasing order of importance. We argue that optimization theory is inappropriate for investigating the products of evolution, that animals should not be expected to be optimal, that it is not possible to test whether they are optimal. We further suggest that it is not possible to test whether behaviour has been selected to fulfil specific functions, that such tests have not been carried out, and that no optimization model of foraging behaviour has been supported. Appeals to the heuristic value of the theory are inappropriate because they encourage unjustified interpretations of the behaviour of animals.

Introduction

In this paper we present a series of criticisms of optimal foraging theory and of the way tests of the theory have been conducted. Some of these criticisms have received considerable attention in the literature, others are relatively new. They refer to flaws at all levels of the theory: its epistemological basis, theoretical validity, and empirical value. While we do not question the validity of the theory of evolution, it will be apparent that the arguments we present have wider implications for the validity of adaptationist explanations of the behaviour and morphology of animals.

The basic tenet of optimal foraging theory is this: foraging behaviour has been shaped by natural selection, so that foraging strategies which maximize fitness will exist in nature, and these foraging strategies will be optimal with respect to criteria that may be evaluated independently of a knowledge of the fitness of the animals (see, e.g., Pyke et al. 1977). Users of optimal foraging theory try to formulate optimal decisions, with respect to the independent criteria, to generate testable qualitative and quantitative predictions about foraging behaviour.

The criticisms are presented in decreasing order of importance. In each case, a criticism is explored on the assumption that the more fundamental objections can be rejected. If one of the more fundamental arguments is accepted, then the lesser criticisms merely refer to the properties of false premises.

Our intent is to provoke discussion. Too often, criticisms of optimal foraging theory are dismissed as "well known", and quietly swept under the carpet without refutation. If they are refutable they should be refuted, not merely denied. If they cannot be refuted, the work criticized should be abandoned for the waste of time it is.

1. What does natural selection maximize?

By definition, reproductive fitness is maximized by natural selection (e.g. Williams 1970): but what does this mean?

Optimal foraging theory requires that the reproductive output of an animal can be explained in terms of the rewards it achieves (food, a mate, surviving by avoiding predation) through performance of the activities necessary for surviving and reproducing, that performance can be explained in terms of phenotypic attributes such as strength and speed, and that these attributes are heritable.

Because selection acts upon individual animals, whereas genes are perpetuated as units, the way in

The contents of this paper and the reply on p. 118 corresponds with the aims of the Forum. On account of their general interest the Editor has accepted the papers in spite of their excessive length.

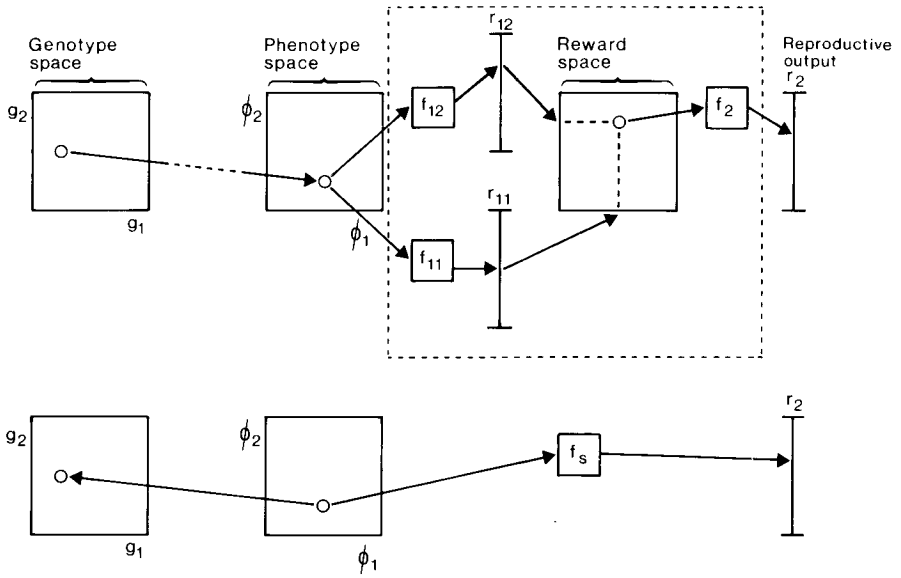

Fig. 1 (above). The set of possible genotypes may be regarded as a g-dimensional space, each dimension being a locus. A particular genotype may be defined as a point (g_1, g_2, ..., g_g) in this space. This point maps in some way to a particular phenotype, which likewise can be regarded as a point (φ_1, φ_2, ... φ_n) in an n-dimensional space each dimension of which corresponds to a phenotypic variable. The animal's behaviour is divided up into m separate activities the jth of which yields a reward, r_{1j}, which is a function, f_{1j}, of the phenotypic variables. The m distinct rewards define an m-dimensional space and the particular set of rewards (r_{11}, r_{12}, ..., r_{1m}) maps to the reproductive output, r_2. f_2 is the mapping function.
The phenomenological relationships that are observable are shown in Fig. 1 (below). The genotypic properties may be inferred only empirically from the phenotypic properties. The relationship between phenotype and reproductive output is also inferred empirically. The argument developed in the Appendix suggests that r_{1j}, f_{1j}, and f_2 are reifications that are devoid of explanatory content.

which genes influence reproductive output is crucial to the validity of optimal foraging theory. Fig. 1 illustrates possible mappings of genotype on to reproductive output, through phenotype and rewards obtained from activities. These relationships are set out more formally in the Appendix.

For performance in activities (e.g. the rate of feeding) to be maximized by natural selection, the following conditions must hold:

(1) Each activity must be objectively definable.
(2) Performance in different activities must depend upon non-intersecting sets of phenotypic attributes.
(3) The underlying phenotypic characters must be heritable.
(4) The contribution to reproductive output by each activity must be a monotonic increasing function of the reward obtained in that activity.
(5) The contributions to reproductive output by different activities must be independent, i.e. increasing the reward from one activity must not lead to a reduction in the reward obtained from another activity.
(6) The reward from each activity is maximized by a unique set of values for the controlling set of phenotypic characteristics.

If rewards achieved from different activities are not independent, there is no reason to expect performance in any one activity to be maximized. If performance in two activities is determined by overlapping sets of phenotypic attributes, performance in both can be maximized only if changes in those attributes affecting both activities alter both rewards in the same direction. If two animals with different phenotypes can both achieve maximal rewards in an activity, one cannot know a priori which (if either) alternative will occur.

Now, consider what is known about foraging. Optimal foraging theory predicts that the rate of energy intake will be maximized only if foraging is an independent activity. However, it is sometimes observed that the need to avoid predators might constrain foragers to feed at less than the maximal rate. This means either that these activities are not independent and there is no reason to expect performance in either activity considered on its own to be maximized, or that the activity has been misidentified, the independent activity observed actually being foraging while avoiding predators. This implies that it is impossible to identify activities a priori, and it is therefore impossible to obtain evidence that independent activities exist. Either it is assumed that independent activities exist and it is possible to identify them by looking for rewards which are maximized, or it

must be assumed that it is possible to identify activities, which may then be examined to discover if they are independent. In both cases there is no escape from circular argument, and it must be concluded that "activities" are merely artifacts of the way biologists look at animals.

If what animals do cannot be divided into independent activities then, in Lewontin's (1978a) words, "We are left in the hopeless position of seeing the whole organism as adapted to the whole environment". The animals that leave the most offspring are reproductively the fittest, but to state that natural selection maximizes fitness in this sense is hardly illuminating. Optimal foraging theory assumes that natural selection will maximize the rewards obtained by animals engaging in independent activities, and that by doing so reproductive output is maximized. Since it is impossible to define the rewards or the activities except circularly, the only thing natural selection can be assumed to maximize is reproductive output.

2. Animals are not designed

Optima, by definition, are the best solutions to problems, under given boundary conditions. For the concept of optimality to be applicable to behaviour, it must be possible to view behaviour as solving problems. Since animals have evolved, these solutions must have evolved: evolution must, in some sense, solve problems.

The problem which is solved by a particular piece of behaviour, or by an organ, may be expressed by ascribing a function to that behaviour or organ. Optimization theory requires that the function of behaviour should mean something more than a tautologous redescription of its consequences. The observed behaviour must represent the culmination (or current state) of the evolutionary process of solving a problem.

Most biologists acknowledge that evolution is not purposeful: it does not design organisms in the way that a Divine Creator might design them. Further, the fact that an animal would die if a particular organ was removed does not imply that the organ would inevitably have evolved (Williams 1966). Nevertheless it has been considered useful to look at evolution as though it was solving problems, although organisms are the products of natural selection on random mutation and recombination, the effect resembles objects of design (Ruse 1977). To avoid the appearance of imputing a teleological component to the evolutionary process, Pittendrigh (1958) used the term "teleonomy".

The analogy with design is not a good one: consider the evolution of the vertebrate eye: At each stage in its evolutionary history, the organ that evolved into the vertebrate eye must have made a positive contribution to the fitness of the animals of which it was a part. At each of these stages this contribution to fitness could have been expressed by ascribing a function to what the organ did, and biologists would have been able to convince themselves that the organ, however it was constituted, was well designed to fulfil its function. Selection has no foresight and can act only upon existing structures: the variants perpetuated are those which currently contribute positively to reproductive output. As the eye was evolving, its structure was changing and the way in which it contributed to fitness must have been changing. It is not meaningful to regard evolution as having solved a problem because what an observer might perceive as the problem was constantly changing (Ollason in press a).

The argument applies irrespective of the relative balance between the rate of change of the environment and the rate of evolution. Selective pressures are determined both by the environment and by the animals available for selection. Even in a constant environment, selective pressures will constantly change as, and because, the animals evolve. The difference between human design and evolution is not just that a human designer knows in advance the problem to be solved and the materials available to solve it: evolution cannot solve problems because the very process of evolutionary change constantly redefines the material available to work with and the problem to be solved.

Consequently, function can be nothing more than tautologous redescription of the consequences of structure. As Nagel (1961) has observed, structure and function evolve simultaneously, and are inseparable.

Inevitably animals possess what might be regarded as beautifully constructed organs and behaviour, which contribute to their survival and reproduction. However, what we might regard as the current function of behaviour or structures cannot be assumed to tell us very much about the functions of its evolutionary antecedents, which must have been different. Optimization models assume that the function has always been the same and that the organ or behaviour changed to correspond more closely to the optimum, and as such misrepresent the nature of the evolutionary process.

3. Optimal strategies may not occur in nature.

Even if natural selection did tend to give rise to oprimal structure and behaviour, there are several reasons why we might not expect to find optimal animals:

(1) Optimal strategies may not have evolved yet, or, as Cody (1974) puts it, populations may spend more time tracking moving fitness optima (climbing adaptive peaks) than they do sitting at the summit optima. Fitness optima are inevitably moving as the environment and the gene pool change.

(2) If foragers have to learn about the environment in order to forage optimally, the optimal strategy may never be attained. Ollason (1980), and Macnamara and Houston (1985) address the question of how and animal might learn to achieve the optimum defined by the marginal value theorem (Charnov 1976), and show that if animals learn as they suggest, it would take an infinite

amount of time for behaviour to converge upon the optimum. Perhaps animals can learn optimally: but the way an animal learns implicitly defines the way in which it perceives its environment, and consequently defines an optimal strategy with respect to that perception of the environment. In other words, all learning strategies could be said to be optimal, each in its own terms. There is no objective criterion with which to compare learning strategies: an animal can only be expected to optimize with respect to those features of the environment which are important to it, but these cannot be evaluated independently of the learning process.

(3) The nature of available genetic variation may militate against the evolution of optimal strategies: there may not be genetic variation in the phenotypic direction postulated, the variation may be of the wrong sort (e.g. the optimal phenotype may be heterozygous), or the optimal strategy of one animal may depend on that of others – and if the optimal strategy is a mixture of phenotypes it may not be genetically feasible (Lewontin 1978b).

4. The existence of optimal strategies is untestable

Two methods of testing for the existence of optimal strategies have been proposed in the literature:

(1) The comparative method: the behaviour or structure which is best adapted is that whose form corresponds most closely to the form typical of the behaviour or structure associated with the activities in question (Thompson 1981).
(2) The modelling method: what we find in nature is compared with "what is predicted a priori on the basis of models designed to mimic the natural system" (Cody 1974).

Both approaches assume the ability of the investigator to identify, a priori, the reward an animal seeks when it engages in a particular activity (i.e. the function of the behaviour), the relevant characteristics of the environment in which the reward is sought, and the possible range of strategies available to the animal.

Since it is impossible to know the function of behaviour a priori, if the observed behaviour appears not to be optimal, it may simply be that the function of the behaviour was misidentified. Even if observed behaviour appears to be optimal, it is possible that the behaviour really has a different function, to which it is not optimally adapted. It is always possible to derive, retrospectively, a function with respect to which observed behaviour is optimal, and many other functions with respect to which it is not optimal.

Maynard-Smith (1978) acknowledged this problem, and observed that optimality must be assumed and that what can be tested is whether behaviour fulfils specific functions. Although most students of foraging behaviour admit that the assumption of optimality cannot be tested, it seems to be forgotten that this means that there can be no evidence for optimal foraging.

5. Functional hypotheses are untestable

The usual approach in studies of foraging behaviour is to assume that it is optimal and attempt to find out what it is optimized to do. The most frequently encountered functional hypothesis about foraging behaviour is that it has been selected to maximize the rate of energy intake while foraging. This hypothesis can be tested only by using it to construct a model of what the animal is doing. In such a model it is necessary to define the range of strategies available to the forager and the environment in which it forages.

Models do not attempt to replicate nature exactly, rather they attempt to capture its essence. In optimization models of foraging behaviour, the representation of the environment is necessarily an abstraction, in which reality is simplified and thus distorted. For example, the marginal value theorem (Charnov 1976) assumes that food occurs in discrete patches which belong to distinct types, whereas in reality most patches of food probably have indistinct boundaries and patch quality may be a continuous variable. Assumptions must also be made about the range of possible behaviour, and these are unlikely to be accurate without detailed knowledge of the behaviour of the species in question.

For it to be possible to test the functional hypotheses underlying optimization models of foraging behaviour, it must be possible to provide independent verification of the assumptions made about the range of strategies available to foragers and the features of the environment which are important to foragers. If these assumptions cannot be verified, confirmation of predictions must be regarded as fortuitous and devoid of explanatory power (Ollason in press b).

The features of the environment which are important to a forager cannot be determined independently of observing its behaviour. It will always be possible to identify a set of environmental characteristics with respect to which observed behaviour is consistent with a particular functional hypothesis, but this process is entirely circular. By asserting that animals perceive the environment in a particular way it would be possible to show that observed foraging behaviour was consistent with any functional hypothesis.

6. Optimal foraging models have not been tested

A number of different problems can be identified regarding the validity of tests of optimal foraging models:

(1) Some published "tests" of optimal foraging models report experiments conducted under conditions which violated assumptions of the model tested, e.g. using foragers which search systematically to test models assuming random search (Krebs et al. 1983, Pyke 1984). Many existing models of foraging behaviour assume

that foragers optimize a single behavioural parameter, all others being constant (e.g. Pulliam 1974, Charnov 1976, Oaten 1977). For example, it is usually assumed that foragers search for prey, and handle prey, with constant efficiency. However, there is abundant evidence that predators of all kinds can vary the rates with which they search for and handle prey: not only can they learn to forage more efficiently, but they can forage more efficently when hungry or when prey are less abundant (e.g. Sih 1982). Pyke (1984) stressed the need to use models appropriate to the study animal (and vice versa).

Models may be good predictors of behaviour even though they contain incorrect assumptions, but this means either that the erroneous assumptions are irrelevant to the working of the model, or that their effects are counterbalanced by the inclusion of other erroneous assumptions. It is important to distinguish between these two explanations, since the latter one renders entirely spurious any support obtained for a model.

(2) Most "tests" of optimal foraging models seek agreement with hypotheses, whereas everybody knows that hypotheses can only be disproved (Platt 1964). The problem with seeking agreement is that poorer data are more likely to support a model. Many "fits" to predictions might disappear if more data were available.

(3) In some studies, the predictions tested were not unique to the models under consideration (Krebs et al. 1983, Pyke 1984).

(4) Often agreement with the original hypothesis is obtained only by incorporating amendments to the assumptions of the model. Even if predictions of the modified models are upheld, the underlying functional explanation may then account for a very small proportion of the observed variability in behaviour, and is quite likely to be wrong. This is analogous to the 16th Century view of the solar system, in which the planets were believed to follow circular orbits around the earth. By adding epicycles to the circular model planetary movements were predicted very accurately, but the underlying circular model was wrong for all that.

7. Optimal foraging models have not been upheld

No single published test of an optimal foraging model that we have encountered has provided unequivocal support for the model. It is totally irrelevant that some predictions are upheld. Once a model has been falsified, it is quite incorrect to assert that the underlying premise was true but that some of the other assumptions must have been wrong. This is entirely possible of course, but must be confirmed by testing alternative models. Thus Cowie (1977) found that his great tits (*Parus major*) stayed longer in each patch than predicted. He explained this by taking into account the difference between the cost of searching and travelling, which he had previously assumed to be negligible, and was able to modify the predictions so that there was no significant difference between the data and the predictions. What he should then have done was to measure the costs of travelling and searching experimentally, but instead he accepted the fit obtained by incorporating the extra unverified assumption into the model, and concluded that the great tits foraged optimally.

Without conducting further tests it is impossible to tell whether foragers show partial preferences, contrary to the predictions of simple optimization models of diet selection, because of errors in discrimination, long-term learning, inherent variation, runs of bad luck, simultaneous encounters with prey, or failure of the animal to be fully adapted to its conditions to life (Krebs and McCleery 1984). It is also impossible to tell whether one of these explanations is correct or whether foragers are not "trying" to maximize their rate of energy intake in any way at all.

Krebs and McCleery (1984) conclude their discussion of optimal foraging theory by asserting that the very simple optimization models of foraging behaviour perform remarkably well, given their simplicity. This implies support for the underlying functional hypotheses which simply does not exist.

Currently, these hypotheses must be regarded as having been provisionally disproved. We suggest that there is not yet any evidence in favour of any optimization model of foraging behaviour. Progress in science proceeds from the recognition of the importance of discrepancies between prediction and observation, and the search for new theories that reduce these discrepancies, not from building endless qualifying clauses on to models to protect them from disproof.

8. The heuristic value of optimization models

Optimal foraging theory has undoubtedly led to the collection of a vast amount of data about foraging behaviour, and while acknowledging its theoretical deficiencies, various authors have made appeal to the heuristic value of the theory. Thus Oster and Wilson (1978) recommended that "the prudent course is to regard optimality models as provisional guides to further empirical research and not necessarily the key to deeper laws of nature", and Marris et al. (1986) suggested that "optimality theory provides useful guidelines for the study of foraging behaviour, but is not a vehicle for the precise simulation or prediction of such behaviour."

This view accords with Kuhn's (1970) description of science as a puzzle-solving enterprise, in which theories are superceded not because they have been falsified but because the new theories are better puzzle-solvers. Yet as Thompson (1981) has pointed out, Kuhn's account was descriptive and should not be taken as prescriptive: "scientists should still attempt to produce unambiguous predictions and empirical data to confirm or falsify them".

Appeals to heuristic value are simply an excuse for failure. However many data are generated, reference to

optimal foraging theory leads to spurious interpretations which can only detract from the understanding of foraging behaviour.

Epilogue

Optimization theory has no place in current evolutionary thought: its use is a throwback to the comfortable determinism of Divine Creation; to the endeavours of natural philosophers seeking to demonstrate the wisdom of the Creator.

J. B. S. Haldane (1963) observed that there are four stages in the normal process of acceptance of a scientific idea:

(1) this is worthless nonsense;
(2) this is an interesting, but perverse, point of view;
(3) this is true, but quite unimportant;
(4) I always said so.

Criticisms of optimal foraging theory have met with all four responses, but current literature suggests very little change in the way ecologists think about foraging behaviour. So, which excuse is it to be this time?

Acknowledgements – We thank G. Iason, H. Crick, and M. East for helpful discussions and comments on earlier drafts of this manuscript. We thank S. C. Stearns and P. Schmid-Hempel for allowing us to see their reply to this paper.

Appendix

In order to clarify the conditions under which optimization theory might be applicable to the structure and behaviour of animals, we first define three multidimensional abstract spaces, in which individual animals may be represented as single points:

(1) genotype space, the dimensions of which represent different independent genotypic variables.

(2) phenotype space, the n dimension of which represent independent phenotypic variables. The phenotype of the ith individual is represented as $(\varphi_{1i}, \varphi_{2i}, \ldots, \varphi_{ni})$. Obviously the heritability of phenotypic variables depends on the nature of the mapping from genotype space on to phenotype space.

(3) performance space, the dimensions of which represent the m different activities in which the animal engages ($m <= n$). The location of an individual in each dimension represents the reward obtained from undertaking a particular activity (e.g. the rate of food intake achieved while foraging).

An individual animal may be characterized by a point in each of these spaces, and by a single value for total reproductive output. In this context we distinguish between three meanings of the word fitness:

(1) a synonym for reproductive output, with no explanatory content.

(2) first-order physical fitness, f_{1j}, being the mapping from phenotype on to the reward obtained from engaging in the jth activity.

(3) second-order physical fitness, f_2, being the mapping from the set of rewards obtained from engaging in m activities on to reproductive output.

The reward obtained by the ith animal engaging in the jth activity may be represented as r_{1ij} where

$$r_{1ij} = f_{1j}(\varphi_{1i}, \varphi_{2i}, \ldots, \varphi_{ni}),$$

The reproductive output of the ith animal may be represented by the following:

$$r_{2i} = f_2(r_{1i1}, r_{1i2}, \ldots, r_{1im}),$$

Consequently:

$$r_{2i} = f_2(f_{11}(\varphi_{1i}, \varphi_{2i}, \ldots, \varphi_{ni}), f_{12}(\varphi_{1i}, \varphi_{2i}, \ldots, \varphi_{ni}). \ldots, f_{1m}(\varphi_{1i}, \varphi_{2i}, \ldots, \varphi_{ni})).$$

For it to be possible to justify the use of optimization theory in ecology, the mappings f_{1j}, $j=1,2, \ldots, m$, and f_2 have to possess the following properties:

(1) The m activities must each be objectively definable and be independent.

(2) r_{1ij} must depend on an identifiable unique subset of phenotypic dimensions for all $j = 1,2, \ldots, m$.

(3) r_{1ij} must be maximized by a unique phenotype $(\varphi_{1\omega}, \varphi_{2\omega}, \ldots, \varphi_{n\omega})$.

(4) f_2 must be a strictly monotonically increasing function of r_{1j} for all $j=1,2, \ldots m$.

These statements may be justified by the following arguments:

Suppose that two separate activities j and k are not independent, i.e. r_{1ij} and r_{1ik} both depend in part on a shared set of phenotypic variables, say $(\varphi_{1i}, \varphi_{mi}, \ldots, \varphi_{qi})$. Thus r_{1ij} will depend on $(\varphi_{di}, \varphi_{ei}. \ldots, \varphi_{1i}, \varphi_{mi}, \ldots, \varphi_{qi})$ and r_{1ik} will depend on $(\varphi_{1i}, \varphi_{mi}, \ldots, \varphi_{qi}, \varphi_{ri}, \ldots, \varphi_{vi})$.

It is clear that the rewards r_{1ij} and r_{1ik} can be replaced by a new reward, r_{1il} say, that depends on $(\varphi_{di}, \varphi_{ei}, \ldots, \varphi_{1i}, \varphi_{mi}, \ldots, \varphi_{qi}, \varphi_{ri},. \ldots, \varphi_{vi})$.

If r_{1ij} is considered separately from r_{1ik} it may be possible to predict the phenotye that maximizes r_{1j}. This phenotype will contain the elements $(\varphi_{1\omega}, \varphi_{m\omega} \ldots, \varphi_{q\omega})$, where ω denotes the value for each phenotypic variable which maximizes the reward r_{1j}. It is extremely unlikely that the values for the shared phenotypic variables which maximize the reward obtained will be identical for both activities j and k.

Thus, if a constraint (the need to participate in activity k) is invoked to explain why r_{1ij} is not maximized as predicted assuming the independence of j from k, it is inevitable that r_{1ik} will not be maximized either. Hence if k is a constraint on j, j will be a constraint on k.

Suppose that the particular type of individual that produces the greatest number of offspring can be identi-

fied, and that such animals possess the phenotype ($\varphi_{1\Omega}$, $\varphi_{2\Omega}$, ..., $\varphi_{n\Omega}$). Such animals must achieve maximum rewards from all the activities in which they engage.

However, there is no objective way of identifying the rewards because there is no way of dividing up what the animal does into independent activities that involve non-intersecting subsets of the set of phenotypic dimensions. There is, equally, no objective way of dividing up the independent phenotypic dimensions into non-overlapping subsets so that a particular subset can be related to a particular activity, and there can be no independent specification of the reward to be obtained from the jth activity nor for the functional form of f_{1j} or f_2.

It is however always possible to select sets of phenotypic characters arbitrarily, determine empirically the values that maximize reproductive output ($\varphi_{d\Omega}$, $\varphi_{e\Omega}$, ..., $\varphi_{q\Omega}$), and then circularly construct first-order fitness functions and rewards that are maximized by the same values for the same set of phenotypic characters.

Under the assumption of optimality there will exist a set of m objectively definable activities, performance in each of which will be maximized by natural selection: but there is no possible way of identifying them. Even if there were there would be no possible way to relate the rewards to reproductive output.

The relationships between phenotype and first-order reward, and between first-order reward and reproductive output cannot be empirically investigated (even if they exist objectively) and this suggests that the whole explanatory scheme amounts to a reification with no content that is not circularly defined.

The phenomenological relationship between phenotypic characters and reproductive output may be represented

$$r_{2i} = f_s(\varphi_{1i}, \varphi_{2i}, \ldots, \varphi_{ni}).$$

Rosenberg (1978) argues that the only possible mapping, f_s, from phenotype to reproductive output is supervenience. Informally expressed, it is taken as a premise that two animals that are physically indistinguishable possess the same fitness; but two different animals may also possess the same fitness, shortcomings in different aspects of their phenotype being compensated for in different ways. Because of this, he suggests that the only way that phenotypic variation can explain variations in reproductive output is by enumerating the phenotypic properties of each of the organisms and associating with each set of properties the reproductive output of the animal in question.

Such an exercise would lack explanatory power, but it might reveal regularities that would at least permit the identification of the phenotypes with the greatest reproductive potential. It would also avoid reference to the hypothetical conceptual clockwork upon which the validity of evolutionary optimization theory depends.

References

Charnov, E. L. 1976. Optimal foraging. The marginal value theorem. – Theor. Popul. Biol. 9: 129–136.

Cody, M. L. 1974. Optimization in ecology. – Science 183: 1156–1164.

Cowie, R. J. 1977. Optimal foraging in great tits (*Parus major*). – Nature, Lond. 268: 137–139.

Haldane, J. B. S. 1963. The acceptance of a scientific idea. – In: Weber, R. L. (ed), 1982. More random walks in science. Institute of Physics, Bristol.

Krebs, J. R. and Davies, N. B. (eds), 1984. Behavioural ecology, An evolutionary approach, Second ed. – Blackwell, Oxford.

– and McCleery, R. H. 1984. Optimization in behavioural ecology. – In: Krebs, J. R. and Davies, N. B. (eds). Behavioural ecology, An evolutionary approach, Second Ed. Blackwell, Oxford, pp. 91–121.

– , Stephens, D. W. and Sutherland, W. J. 1983. Perspectives in optimal foraging. – In: Clark, G. A. (ed), Perspectives in ornithology, Cambridge Univ. Press, New York.

Kuhn, T. S. 1970. The structure of scientific revolutions. – Univ. of Chicago Press, Chicago IL.

Lewontin, R. C. 1978b. Adaptation. – Sci. Am. 239: 212–230.

– 1978. Fitness, survival and optimality. – In: Horn, D. J., Mitchell, R. D. and Stairs, G. R. (eds), Analysis of ecological systems. Ohio State Univ. Press, Columbus, OH, pp. 2–31.

Macnamara, J. M. and Houston, A. I. 1985. Optimal foraging and learning. – J. Theor. Biol. 117: 231–249.

Marris, G., Hubbard, S. and Hughes, J. 1986. Use of patchy resources by *Nemeritis canescens* (Hymenoptera: Ichneumonidae). I. Optimal solutions. – J. Anim. Ecol. 55: 631–640.

Maynard-Smith, J. 1978. Optimization theory in evolution. – Ann. Rev. Ecol. Syst. 9: 31–56.

Nagel, E. 1974. The structure of science. Problems in the logic of scientific explanation. – Routledge and Kegan Paul, London, pp. 398–446.

Oaten, A. 1977. Optimal foraging in patches: a case for stochasticity. – Theor. Popul. Biol. 12: 263–285.

Ollason, J. G. 1980. Learning to forage – optimally? – Theor. Pop. Biol. 18: 44–56.

– In Press a. Artificial design in natural history: why it's so easy to understand animal behaviour. – In: Bateson, P. P. G. and Klopfer, P. H. (eds), Perspectives in Ethology. Vol. 7. Plenum Press, New York.

– In Press b. Learning to forage in a regenerating patchy environment: can it fail to be optimal? – Theor. Popul. Biol.

Oster, G. F. and Wilson, E. O. 1978. Caste and ecology in the social insects. – Princeton Univ. Press, Princeton, NJ.

Pittendrigh, C. S. 1958. Adaptation, natural selection and behaviour. – In: Roe, A. and Simpson, G. G. (eds), Behaviour and evolution. Yale Univ. Press, pp. 390–416.

Platt, J. R. 1964. Strong inference. – Science 146: 347–353.

Pulliam, H. R. 1974. On the theory of optimal diets. – Am. Nat. 108: 59–75.

Pyke, G. H. 1984. Optimal foraging theory: a critical review. – Ann. Rev. Ecol. Syst. 15: 523–575.

– , Pulliam, H. R. and Charnov, E. L. 1977. Optimal foraging: a selective review of theory and tests. – Quart. Rev. Biol. 52: 137–154.

Rosenberg, A. 1978. The supervenience of biological concepts. – Philosophy of Science 45: 368–386.

Ruse, M. 1977. Is biology different from physics? – In: Colodny, R. G. (ed.), Logic, laws and life, Some philosophical complications. Univ. of Pittsburgh Press, Pittsburgh, pp. 89–128.

Sih, A. 1982. Optimal patch-use: variation in selective pressure for efficient foraging. – Am. Nat. 120: 665–685.

Thompson, N. S. 1981. Towards a falsifiable theory of evolution. – In: Bateson, P. P. G. and Klopfer, P. H. (eds). Perspectives in ethology. Vol. 4. Advantages of diversity. Plenum Press, New York. pp. 51–74.
Williams, G. C. 1966. Adaptation and natural selection. A critique of some current evolutionary thought. - Princeton Univ. Press, Princeton, NJ.
Williams, M. B. 1970. Deducing the consequences of evolution: a mathematical model. – J. Theor. Biol. 29: 343–385.

Evolutionary insights should not be wasted

Stephen C. Stearns and Paul Schmid-Hempel, Zoologisches Inst. der Universität, Rheinsprung 9, CH-4051 Basel, Switzerland

Summary. In reply to Pierce and Ollason's critique of optimization techniques in general and foraging theory in particular, we discuss the logic and use of optimality approaches. Most of their argument is based on a misinterpretation of the underlying logic of optimization theory and, more generally, of basic tenets of the scientific method. We agree with some points – not new ones – towards the end of their list – in particular with certain problems encountered when analyzing foraging behaviour.

Introduction

That there are problems with using optimization theory in ecology and evolution is no news to the research community. However, the precise sense in which the technique remains valid has not been appreciated in all quarters, as evidenced by Pierce and Ollason's (1987) attack. They arrange their points in decreasing order of importance, but for the following reasons we find ourselves in agreement with them only as they near the end of their series.

First, in analyzing some problems that arise in modelling behaviour, they have generalized their critique to an attack not just on adaptationist thinking in biology but on the general role of theory in science. Even if the situation in optimal foraging were as bad as they think – and it is not – their statement would still be an unjustified exaggeration. Secondly, their argument is based on a misapprehension of the claims of optimality modellers, whose conception of the organism and of constraints on the evolutionary process is much more sophisticated than Pierce and Ollason are willing to acknowledge. There is not much glory and often much confusion to be gained in the destruction of a straw man.

We have chosen to reply not because these issues are poorly understood by researchers, but because a published attack on optimization, especially one as flawed as this, might confuse to the field by misrepresenting its accomplishments and its current status. We begin our comments at a general level, then finish with a discussion of specific points raised by Pierce and Ollason. It is inevitable that some of our points have already been discussed in the literature (e.g. Oster and Wilson 1978, Maynard Smith 1978, McNeill Alexander 1982).

1. Defining fitness

Pierce and Ollason make heavy going on several points where closer attention to basic evolutionary theory would eliminate the problems before they arose. First, there is the apparently troublesome term, "fitness". Pierce and Ollason state explicitly, in their Appendix, that if fitness is taken to mean reproductive output, then it has no explanatory content. This is their version of the old accusation that evolutionary theory is circular because it predicts the survival of the fittest, but defines "fittest" as those that reproduce and survive most successfully. On the one hand, such remarks ignore the broad palette of fitness measures that are available for help in making predictions. On the other, such remarks ignore the fundamentally circular nature of deep axioms in all branches of science. We consider the existing diversity of fitness measures first.

In nature, organisms are born, reproduce, and die. We observe the descendants, and in trying to make sense of the patterns that we see, we invent abstract terms, like "natural selection," "fitness," "adaptation," and so forth. These terms help in explaining patterns, making predictions, and constructing consistent interpretations of observations that would otherwise appear to be unrelated. Thus the justification for any definition of the basic terms is practical.

While a term like "fitness" may be used loosely in evolutionary chat, in any specific model, whether in population genetics, optimal foraging, or life-history theory, the term has a concrete and quite unambiguous technical meaning. The meaning may vary from field to field, but in any given context it is clear and, for the purposes of the problem being analyzed, it is rarely if ever a circular definition. In population genetics, the meaning of fitness (usually W), is "that parameter best representing differential reproductive success in such a way that one can predict changes in gene frequencies." Note that fitness serves to help predict changes in gene fre-